Revision 1.03/1 Nov' 2012

General Purpose ILDA interface board V1.03

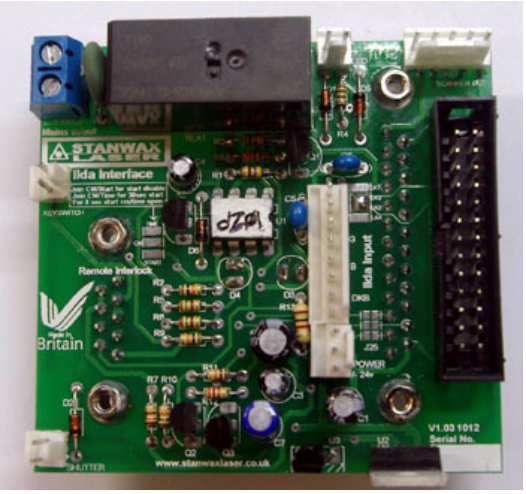

Introduction

The Stanwax laser ILDA interface board is designed to make internal wiring of a laser projector a simple affair by taking the ILDA signals and providing easy access to the connections. As well as this it contains safety interlock circuits that control a relay that is used to turn mains power onto the laser sources and has an output for a shutter (not included) that will operate with the laser hardware (DAC) to close the beam path when the ILDA shutter signal or the interlock dictates. Output is provided for a laser emission LED to be located on the front of the projector and the safety interlocks include a key switch (or other interlock circuit), plus e-stop and ILDA cable interlocks. The interlock connection also has the facility to connect a laser start button and a laser status LED that can be housed remotely with the e-stop. All of these features are designed to assist in making the projector comply with BS EN:60825-1:2007

Operation

The Ilda board has an on board timer chip that controls the relay that powers the lasers in the projector. This timer is held in a hard reset condition when the interlock loop is broken. The interlock loop consists of a 12V feed that has short circuit protection built in. This signal must pass through several places before reaching the timer chip and allowing it to come out of reset. First the signal goes to the ILDA input connector and using the ILDA standard interlock pins (4 & 17) it is passed through your ILDA lead to the laser control hardware and back. Next it passes to the key switch pins which as well as allowing a key switch to be used other interlock circuits can be implemented such as a case open micro switch. Any other interlocks should be wired in series and set that they go open circuit when the projector needs to be in a 'safe condition'. Following the key switch the signal is presented to the remote interlock connector where it can be used with a remote e-stop for emergency action. The e-stop must use contacts that close when the e-stop button is released. We recommend a 'Key Only' release for security. This loop is a single continuous therefore any break in it will prevent the laser from operating.

Once the interlock circuit is complete the timer chip comes out of reset and this is indicated by the Bi-colour LED turning green. This signifies that the projector is armed and ready to be activated. Closing momentary contacts between pins 1 & 8 on the 9-way remote interlock connector will start a short time delay of 7-8 seconds (30 seconds is selectable by a solder jumper on the PCB). As the time is elapsing the Bi-colour LED (panel mount board) will flash red to green indicating that the time sequence is in progress. When the timer has finished the relay is activated, switching on the power to the laser sources and the emission LED is provided with power. The Bi-colour LED will stay in the red state showing that the laser is now fully active. There are connections on the 9-way remote interlock connector for this LED to be duplicated at a remote location, and an E-stop with LED and start button can be used to provide all of the functionality you need at your control station.
If you do not need a start function (laser output is below class IV) then joining the solder jumpers Start and CM on the PCB will negate this and as soon as the interlocks are all made the time delay will begin. Also if you wish to implement a simple E-stop at your control station then the 9-way remote interlock connector can be fitted with a shorting link (see diagram under section 'remote interlock connector').

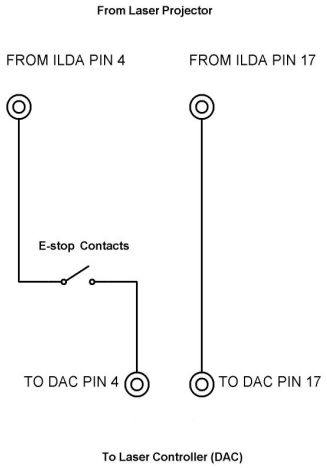

A simple way to implement an e-stop is by using the ILDA interlock between pins 4 and 17. These can be 'broken out' at your remote control station adjacent to the laser control hardware. In this instance it is recommended that the E-stop and Laser hardware (such as Pangolin FB3) be wired in series so that the laser power will be cut in the event of the hardware becoming disconnected. See wiring suggestion above.

Note - The board should be supplied from a power source that is always on with the projector power as it switches power to the laser modules following a start-up time delay. We would recommend using the scanner power supply as long as it has enough 'spare' current capability to power the board.

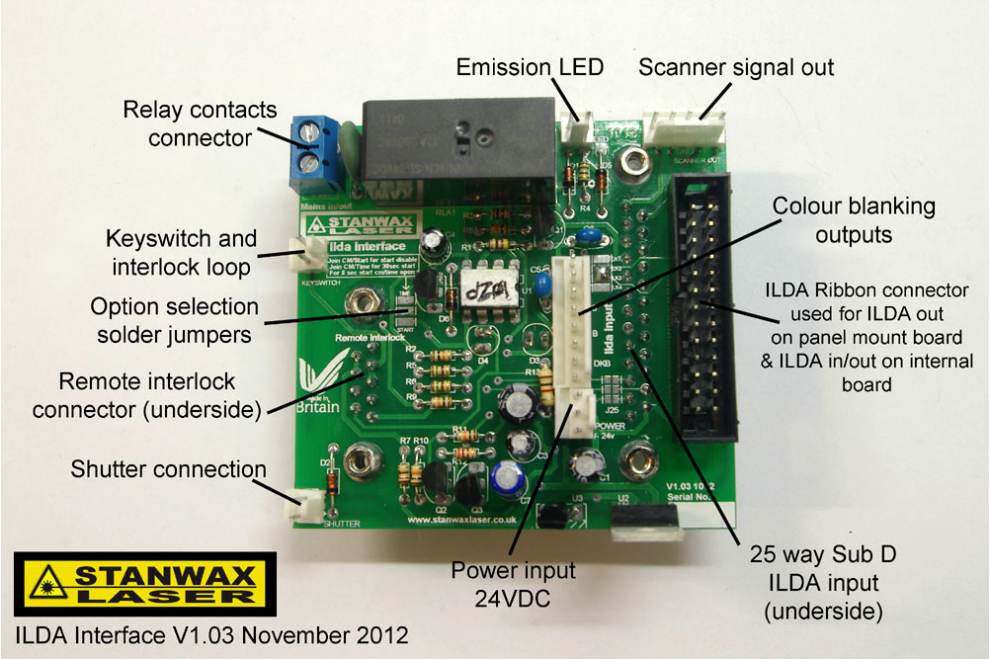

Connections – see image above & connection diagram at the end of the document

ILDA in – 25-way sub d male (on underside of PCB in this view – Not included for internal mounted board)

ILDA Out (in/out) – Header for connecting IDC 26 way lead to be used as ILDA output (in conjunction with 25-way sub d as input) or as ILDA in/out if 25-way connector is not fitted as per internal mount board.

Colour Blanking outputs – Provides differential colour outputs for R,G,B, & DkB (when optional colour correction board is fitted this connector provided the laser blanking signals to the colour board)

Remote Interlock – (Underside of PCB) For connecting Emergency stop button plus optional Start Button and Bi-colour LED for laser status (see connection details overleaf.) For internal version of the board this connector protrudes from the underside of the PCB.

Solder Jumpers - Join **Start** to **CM** to override the Start button
Join **Time** to **CM** to set start time to 30 Seconds (default time delay aprox 8 seconds)

Key switch - connection for security key switch. This can also be used to connect other interlock loops such as a housing interlock switch. Wire N/O contacts in series with key switch to facilitate this.

LED – Emission LED output. Any 2v LED can be used directly across these pins. The pin nearest the relay is LED cathode pin. The emission LED should not be a Bi-colour type and if used only one LED will light.

Scanner Out - connection for X & Y axis scanner signals. Differential outputs plus ground (centre pin – not normally needed)

Shutter output - for connecting solenoid shutter device of 24V (dependant on power supply) It is possible to modify the board to operate shutters and actuators such as STP8 or GM20 – please email for details

Relay contacts -(N/O) connect in line (series) with mains live feed to laser modules.

Power – 24V DC power input designed to run from the scanner power supply or other power source that is present when the projector is turned on (Use +/- 24v if using colour correction expansion board)

The two voltage regulators (lower right on image above – if metal tabbed types are fitted) must be attached to a heat sink, this can be done by attaching them to an aluminium bracket or panel, no insulation is needed between the devices and an earthed panel.

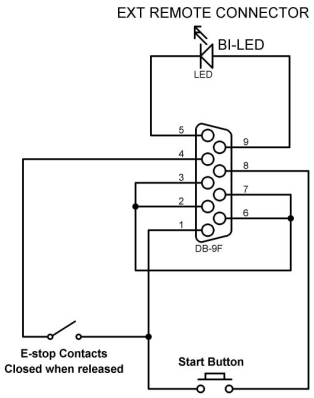

Remote Interlock connector

Connections for the remote interlock are shown right (as viewed looking at the connector on the rear panel.

Note if you have used earlier versions of the ILDA board pin 4 is now in use as the multiple e-stop connection. (see section below titled 'Using a single E-stop')

It is advised for future compatibility to use this arrangement with pin 4 as an E-stop connection as shown left.

The Bi-LED should be wired up so that the Red LED is on when the laser is active and the Green LED is on when the laser is armed before the start button is pressed.

Note pins 2 & 3 are joined on the PCB as are 6 & 7 so in practice only one pin from each row need to be joined.

Remote Interlock Pin Assignments

1 – Ground
2 - Projector Interlock A
3 - Projector Interlock A
4 - E-stop control pin
5 - Bi-Led Flat
6 - Projector Interlock B
7 - Projector Interlock B
8 - Start button
9 - Bi-Led

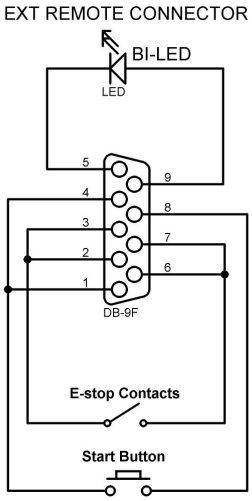

If using an E-stop that's compatible with and older V1.01 or V1.02 ILDA Board then you need to mod the wiring as shown right to include grounding of Pin 4. Either method shown will work as a suitable E-stop connection though we would advise using the diagram above as all future boards will use this method. The projector will not work unless pin 4 is grounded AND the projector interlock A and B pins are shorted together.

The board is provided in one of two variants, the first variant has two sub d connectors on the rear of the PCB and is designed for panel mounting on the rear of the projector. In this case you will need to mount it using a Stanwax Laser mounting panel or drill and cut your own rear panel according to fig1 on the included sheet. In this configuration the row of 4 solder link pads next to the modulation output connector must have the centre two pads joined. This ensures that the ILDA interlock signal is set correctly onto the header for the ILDA out connection. (note these pads will be set at the factory to match the version you have ordered)

The second variant allows the user to mount the PCB inside the projector (not protruding through the rear panel). A 9-pin Sub D is attached to the underside of the board and protrudes from the left hand edge of the PCB (see image left) A 9-pin ribbon is available as an optional extra to bring the remote out to the rear panel of the projector.

In this configuration the row of 4 solder pads must have the centre pads disconnected and the upper and lower pairs joined or the device will not operate (note these pads will be set at the factory to match the version you have ordered). To mount the board inside the projector, use Fig 2 to mark and drill mounting holes. With the internal version the power LED and Bi-colour laser status LEDs can be mounted on an external panel of your projector. See silk screen markings on the top of the PCB for LED polarity. The fitting of these LEDs is optional.

It is important to ensure adequate clearance between the PCB and the panel its mounted on (at least 6mm) to ensure the live connections to the relay contacts are not close to the metal case or base plate. The (pin connector on the Internal board will provide adequate distance and the holes for the IDLA input connector can be used with suitable pillars to secure the board. It is recommended that the metal panel to which the board is mounted is insulated or that the board is mounted on a plastic or fibreglass insulated mounting panel.

Relay contacts should be wired in series with the live feed to your laser power supply feed, a protection device on the board reduces the chance of relay contact failure or fuse blowing from current inrush when using a switch mode power supply. If used with a Stanwax Laser Power Distribution Board then the two connections on the ILDA board should be connected to the ILDA Board connections on the Power Distribution PCB. It does not matter which way round this pair of wires is connected

WARNING. This device is designed to switch live mains. Wiring to this device should be performed by a competent person trained in electrical wiring to ensure your equipment is safe. Electricity can kill! If you have any doubt about the safety of the equipment after wiring get it checked by an electrician before use.

Using a single E-stop

With V1.03 comes a new feature that makes it much easier to connect many boards together to work from a single e-stop and start button. Irrespective of whether you are using a single projector or multiple projectors, it is recommend to wire the e-stop as per the diagram at the top of the previous page to ensure forward compatibility. When multiple projectors are used, the 9 pin of the first projector in the 'chain' will provide e-stop and laser status LED signals to the emergency stop control, as well as the start button function. The other projectors need only have 3 pins from the 9 pin connector wired to each other as shown in the diagram below. In effect there are now two interlocks present on the remote interlock connector, and it is important that both are used. The reason that there are two is so that each projector can keep its own interlock loop (via its key switch and ILDA input) and this will then affect just one projector, if its own loop is broken. For example if one ILDA input lead had not been secured properly and slipped out, then just that one projector would be affected rather than killing the output to all, in the chain.

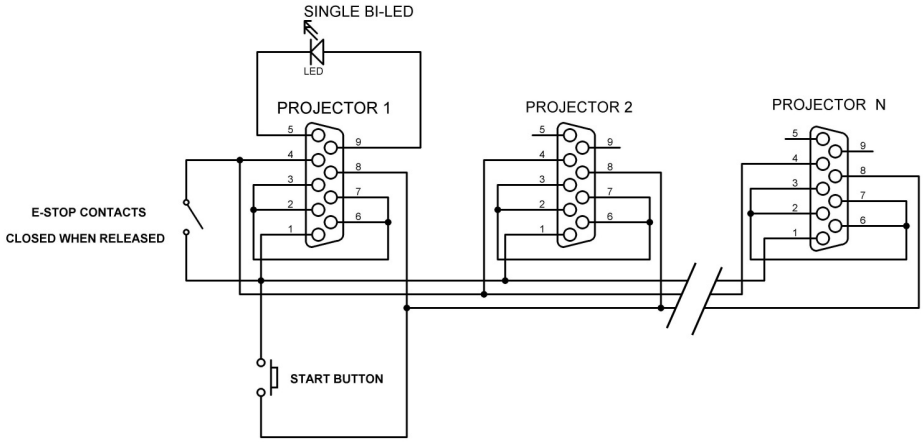

As you can see the connector for projector 1 has the e-stop and start button contacts as well as the laser status Bi-Coloured LED connected to it, the others need only have pins 1, 4 and 8 from the 9 pin connector joined. Also note that connecting via the interlock loops the e-stop function is independent of the ILDA inputs so it does not matter if the projectors are running of one laser controller or several, the e-stop and start function will still work.

Wiring the ILDA board to a DMX projector

If you have a DMX equipped projector, use the diagram right as a guide to how the ILDA board can be wired to maintain the DMX function. DMX lasers differ in their wiring so this can only be a rough guide. As many will use the ILDA interlock pins to sense if there is ILDA input and therefore switch from internal to external control, you will need to do this manually with a switch on the projector. Connect the switch to the DMX board pins that would normally connect to the ILDA input pins 4 and 17. Set it so that when made the ILDA input is ignored and the DMX board is activated. The ILDA board will need to have ILDA connector to have pins 4 and 17 correctly shorted to complete the interlock loop so connecting this to the same switch as the DMX board 4 & 17 wires is a good idea.

The input to the DMX board for scanner and blanking as shown can be made to where the ILDA input would normally connect. An e-stop connected to the remote interlock connection will then operate as normal. If daisy chaining then several DMX projectors could work along side projectors operating from an ILDA signal and the E-stop function will work on all projectors

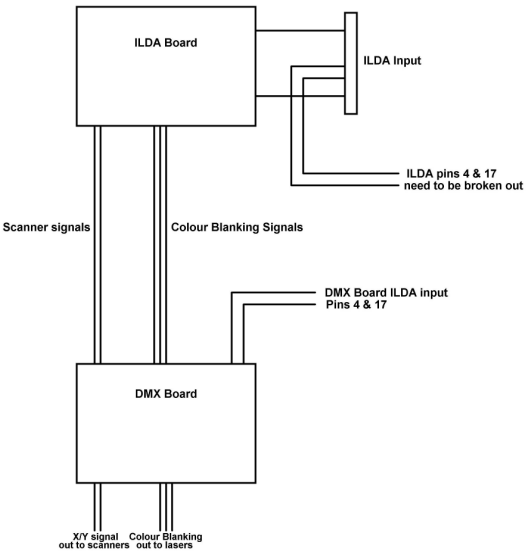

Troubleshooting

The Stanwax Laser ILDA interface board has proved very reliable in laser projectors all over the world but occasionally problems may occur. Below is listed a few basic things to look for if the board will not work.

Power LED lights but Bi-colour LED is out

This indicates that the projector interlock loop is open or the E-stop control pin is not grounded. Both of these conditions must be met or the LED will not light.

Bi-colour LED lights green but the projector will not output

The Bi-LED lighting green shows the projector is 'ready' to start, and unless the solder link on the PCB has been made to bypass the start button, this function must be provided. The start button should be a momentary push to make spst switch and must be connected between pins 1 & 8 of the remote interlock connector

The Bi-colour LED lights red but the lasers a have no power

The relay may not be pulled in, the board needs a 24V power supply and the relay is a 24V type (though other voltages are available to special order). If the power supply I low the relay may not have enough voltage to pull in despite the rest of the board appearing to function correctly

The emission LED will not light

The connection for this LED is marked for polarity, ensure that it is wired the right way round. Any standard 2-3V LED will function on this connection and no series resistor is required.

Scanner output has a 'wobble'

Normally the board should be powered by the scanner PSU, though any 'always on with the projector' supply of suitable voltage will work. If using an auxiliary supply (not the scanner PSU) then you may need to ground this supply to the scanner PSU. This can be done using the centre pin of the 5 pin X & Y signal connector which normally need not be connected.

Specification

Dimensions	– 70mm x 25mm x 25mm (depth from panel when panel mounted)
Power	–24V DC
Current	– 50mA relay inactive
	– 140mA relay active
Shutter Voltage	– 24V DC (the board is designed for a solenoid type shutter but can be modified for other types) (please get in touch if you need further info on other shutter types)
Shutter current	– 70mA holding current with 24v power supply
Start up delay	– 8 or 30 seconds (selected by solder jumper on PCB)
Switching Current	– 5A @250VAC Max Note relay contacts are rated for 12A but inrush protection limits total to 5A
Interlock Voltage	– 12V with series resistor for short circuit protection

Wiring the Stanwax Laser Ilda Interface board

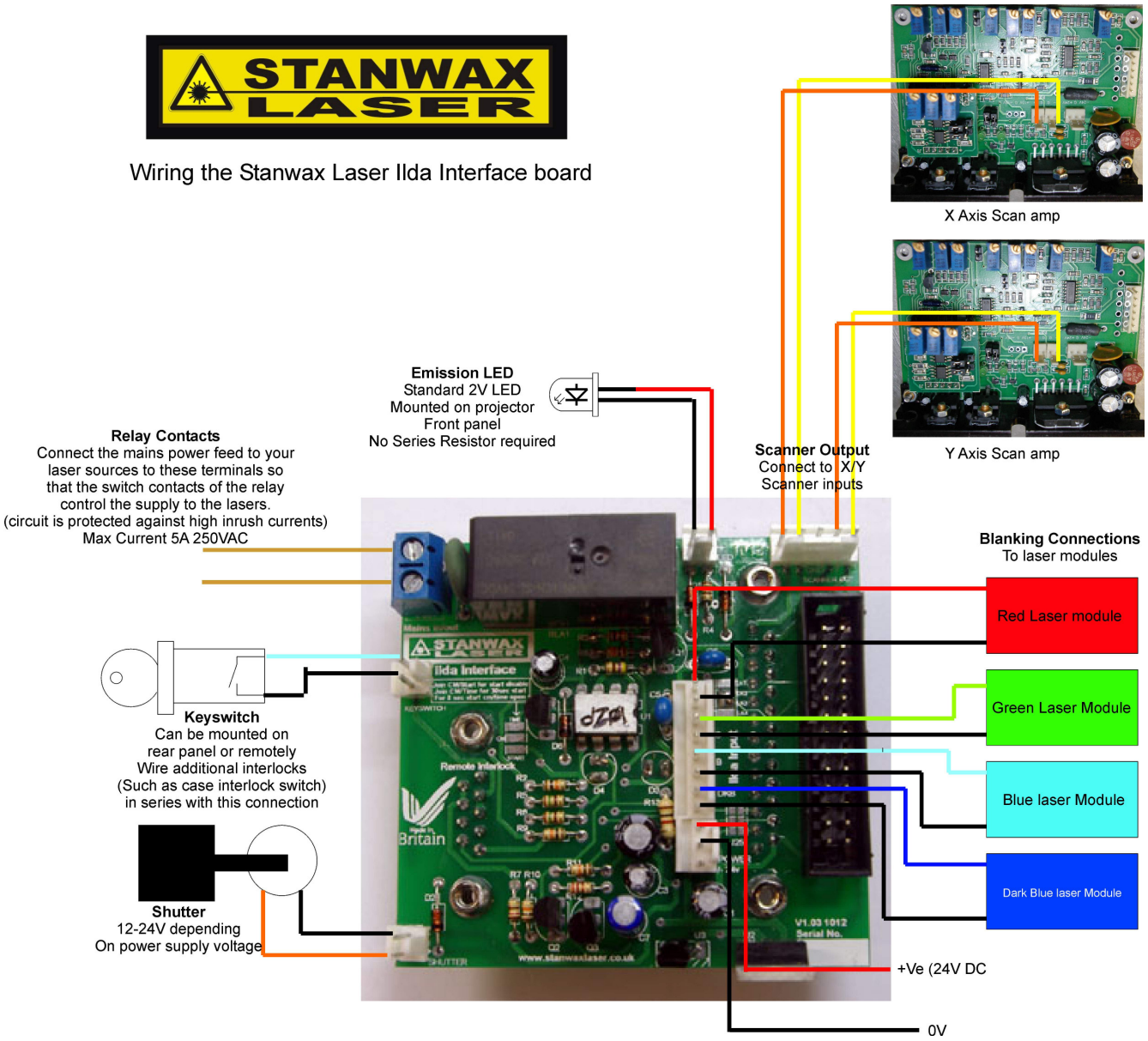

Note 1. The board requires a single ended power supply to operate (+24v) but can be wired with a split rail power supply (+/-24V) to the 3 pin power connector. This would make it compliant with the optional colour correction daughter board that can be fitted afterwards. For Ilda board only to operate just a single rail supply is needed.

Note 2. If you have purchased an internal board you will be provided with a yellow power LED and a Bi Colour LED, these should be connected to the PCB positions marked D3 (yellow) and D4 (Bi-Colour). Fitting of these LEDs is optional, but the Bi-Colour must NOT be connected to the emission LED connection. The emission LED must be a single LED and should be connected as shown above. Connecting the Bi-Colour LED to this position may compromise the operation of the board.

Note 3. The centre pin on the 5 pin connector for scanner output is a ground pin and is connected to ILDA pin 25. This pin is only needed to ensure the scanner drivers and the ILDA board power supplies have good ground connection between them. If you are using the scanner power supply to power this board then this pin does not need to be connected.
Also this pin can be used if using scanners with single ended signal input. In this case you would connect X+ and the centre pin to the X scanner signal input and Y+ and the centre pin to the Y scanner signal input

Note 4. The board only needs a single ended supply, 3 pins are provided on the connector to ensure compatibility with the add on colour correction daughter board (available separately).

Panel drawings for ilda interface board mounting

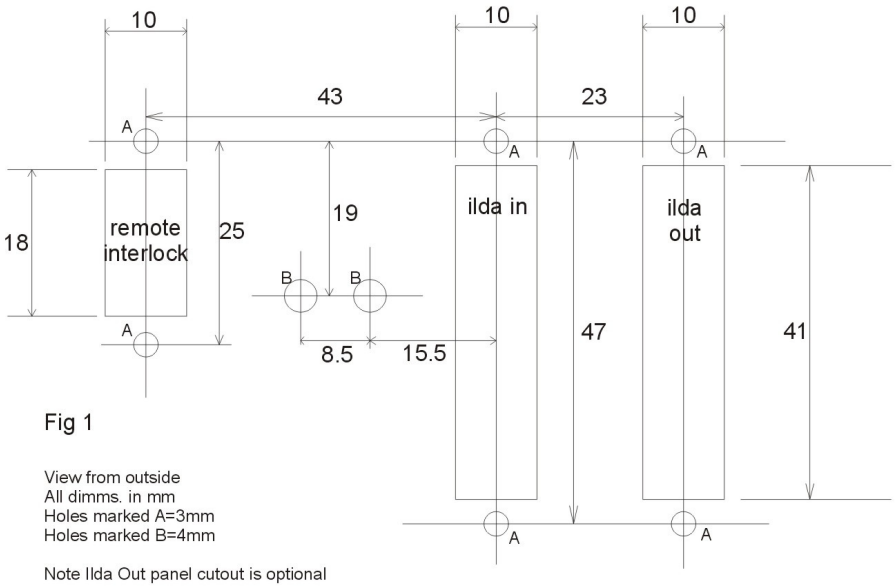

Fig 1

View from outside
All dimms. in mm
Holes marked A=3mm
Holes marked B=4mm

Note Ilda Out panel cutout is optional

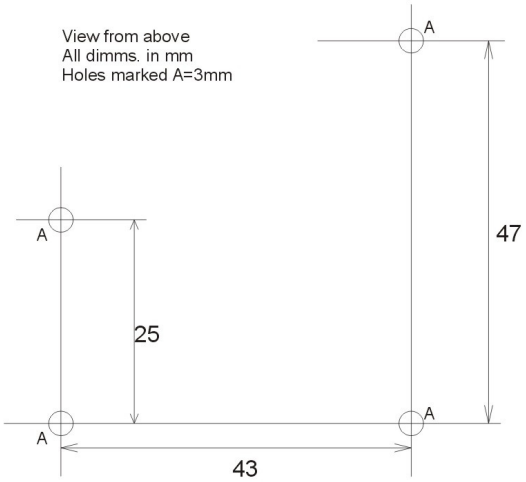

Fig 2